TTC100 Cable Tool Setter

Composition of tool setter

TTC100 cable tool setter consists of a hardware and the software. The model of the software is SP-T10; the hardware also has two accessories:

1) 20 mm thick mounting base;
2) Blow- cleaning device (optional).

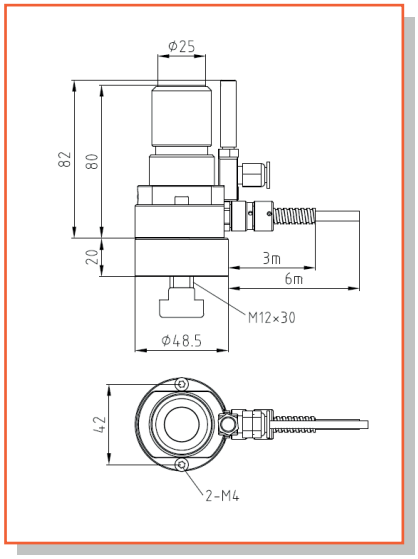

Technical Parameters

◆ The nominal height of the TTC100 tool setter is 80mm, it is 100mm when the 20 mm thick mounting base added;
◆ The diameter of the touching face(for cutting tool touching): 25.0 mm, the hardness of the touch face: HRA 90-93;
◆ Travel distance of the touch face in -Z direction: 5 mm;
◆ Trigger repeatability of the tool setter(2σ): ⩽ 1 μm;
◆ Input voltage is 24V±10% (DC) and output load current is 50 mA(max).
◆ Seal grade: IP68.

Technical Characteristics

◆ Tool setter transmits signal through cable, reversal connecting tool setter’s power supply can reverse the state of the output signal;
◆ There are two installing and fixing methods, one is to install directly, the other is to add a mounting base of 20mm thick, the tool setter’s height can be raised from 80mm to 100mm.
◆ One LED indicator light is used to display the tool setter’s working state.

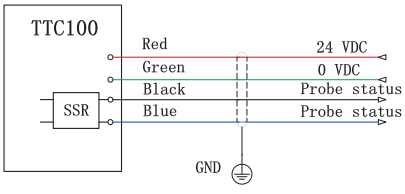

Notes for purchase

◆ As for the cable length, verify whether the cable length equipped is enough for installing the tool setter on your machine tool; If lengthening cable is needed, special instructions should be given when ordering the product;
◆ Verify whether you need blow-cleaning device or not, and whether there is a spare M code in the CNC system of your machine for controlling the blowing device.

Application

◆ Set lengths parameter of cutting tools automatically before CNC processing;
◆ Detect wear and breakage of cutting tools automatically between two processes or after the CNC processing;
◆ Through checking cutting tool parameters to control the change of machining precision from the temperature change of the machine;