# PIONEER

## Pioneer Probe—sharp tool of CNC machining

WWW.PIONEERGROUP-CN.COM

PIONEER

哈尔滨先锋机电技术开发有限公司

Harbin Pioneer M&E Technical Development Co., Ltd

● Contact Us


Harbin Pioneer M&E Technical Development Co.,Ltd
Address：1F,Building 4，TianpingRoad 22，Daoli District，Harbin，China.
Postcode：150078
Tel： +86 451 82330895 82293947

PIONEER HARBIN PIONEER M&E TECHNICAL DEVELOPMENT CO.,LTD

Fax: +86 451 82293947 82285451 Email: sales@pioneergroup-cn.com Http: www.pioneergroup-cn.com.




Part no.:EC00-0523-069

RP610M P09

TTC200 P30

Star stylus P33

Harbin Pioneer M&E Technical Development Co., Ltd. (hereinafter referred to as Pioneer M&E) was founded in 1995 by Mr. Sun Baichun . It is a leader manufacturer of CNC machine tool probe products in China, focusing on machine tool in machine testing for more than 20 years, and is committed to improving the manufacturing level of China's mechanical processing industry.

The main business of Pioneer M&E is the development, production, and sales of CNC machine tool probe system products. The series of products include wireless communication measurement systems, infrared communication measurement systems, and stylus. As the first professional manufacturer in China of CNC machine online measurement products, Pioneer M&E has always been striving to track the international level.

After years of technological accumulation, we have a series of products such as wireless and infrared communication probe systems, and have obtained multiple product patents, including one invention patent. The national industry standard "Trigger Sensor" (JB/T5215-2007), which was developed and participated in, was implemented on May 29, 2007, The implementation of this industry standard marks the leading position of Pioneer Mechanical and Electrical Company in terms of research and production capacity in the same industry nationwide. In 2013, MARPOSS S.p.A of Italy became one of the shareholders of Pioneer M&E, which became a Sino foreign joint venture.

This sample will introduce you the advantages of probe measurement and the technical details of the company's entire series of products. We hope it will be helpful for your product selection and bring benefits to your manufacturing enterprise through our company's products.

In the industrial field, the machinery manufacturing industry must have high-quality and eficient workpiece processing capabilities. Among them, CNC machine tools are an important part of modern industrial automation. CNC machine tools (CNC, Computer numerical control) are short for computer numerical control machine tools. An automated machine tool controlled by a program. The controller of the machine tool controls the movement of the machine tool by issuing command codes. Any machine tool controlled by such cocles can be called a CNC machine tool, including small and medium-sized machining centers, milling machines, lathes, and even plasma cuting machines. How to improve the machining accuracy and efficiency of this type of CNC machine tool, probe measurement is the best method in the machinery industry at present. Combined with the standard program built into the modern CNC controller, a variety of probe measurement solutions solved the problem of measuring in the traditional machining process. such as low cycle efficiency, complicated machining operations and off-line tool calibration.
CNC machine tool probe products include: workpiece probe for on-machine detection of workpiece parameters and tool seter (tool probe) for setting too-l parameters:

- Using the workpiece probe can set the processing benchmark of the workpiece, measure the size of the workpiece and control the accuracy of proces
sing;
- Use the tool setter(tool probe) to set parameters such as the length or diameter of the tool, and monitor the state of tool wear or damage.

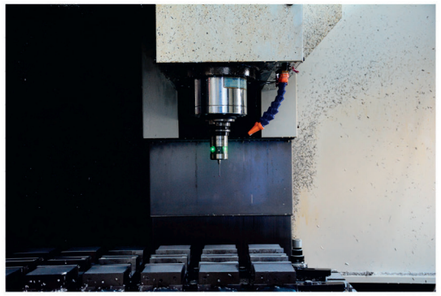

## Why use Pioneer workpiece (tool) probe on CNC machine ?

The CNC machine tool probe can be used to accurately locate the workpiece pos ition before processing. The operator executes the measurement program compose d of command codes. The CNC machine tool probe is installed on the machine tool spindle, moves according to the program, touches the workpiece, and sends out a s ignal (sound, Light, electricity and other signals), can guarantee:

- Improve the production process, quickly and accurately measure and find the ref erence position of the workpiece;
- Optimize the machining allowance control to ensure the quality and consistenc y of batch products;
- Realize the in-sequence detection of the processing cycle, shorten the downtime of the machine tool and improve the production efficiency.

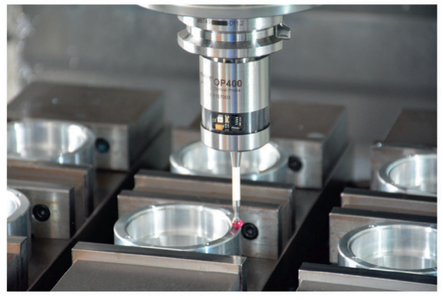

The CNC machine tool probe (tool setter) can correctly set the size of the tool before processing. The operator fixes the tool setter on the working table of the machine tool. When the tool touches the tool setter, the positional relationship between the tool end edge and the worktable will be obtained; or determine the actual diameter of the tool with the help of the center coordinates and radius of the tool setter stylus, and obtain the following advantages:

- Quickly and accurately measure and correct tool length and diameter offset values;
- Reduce the influence of manual operation factors on the accuracy of tool setting;
- Monitor the wear and damage of tools in the process to reduce the scrap rate;
- Reduce machine auxiliary time and improve production efficiency.

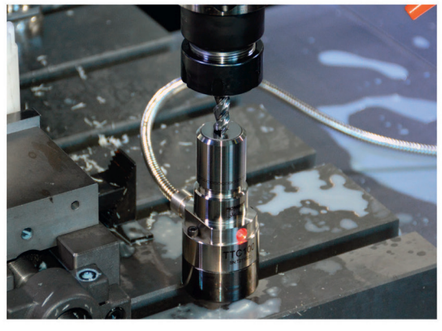



PIONEER Copyright © Harbin Pioneer M&E Technical Development Co., Ltd

# How to select the correct and applicable products quickly and accurately?

If you can follow the guidelines to refer to this brochure, it will save you time;
If you have plenty of time, you can start to learn about the various products from the following product catalog.

## Quickly find products that are useful to you :

First, Identify the problems you want to solve (refer to the following questions: A, B, C);
A. Workpiece problem《product selection table -1》: set workpiece processing benchmark, measure workpiece size, control machining precision, etc;
B. Tool problem《product selection table -2》: product selection table -2" : tool length or diameter parameter setting, tool wear or damage control, etc;
C. Stylus selection: please refer to 《stylus selection brochure》.
Second, According to your equipment type and the way you want to solve the problem (auto or manual), you can find out which products you should to look in the following 《product selection table -1/2》;
Third，According to the page numbers marked in the corresponding products in the 《product selection table -1/2》, You can find detailed information of the products.

**Product selection table -1**

| No. | Name | Model | Working method | Type of machine | Page No. (Hard ware) | Page No. ( Software) |
|---|---|---|---|---|---|---|
| 1 | Optical probe system | OPS-20 series | Automation | Medium/small machining center, CNC boring and milling machine | P01 | SP-W10/P34 |
| 2 | Optical probe system | OPS-30 | Automation | Large/medium machining center, CNC boring and milling machine | P05 | SP-W10/P34 |
| 3 | Radio probe system | RPS-20M series | Automation | Large/medium machining center, CNC boring, milling machine, CNC mill/turn center | P09 | SP-W10/P34 |
| 4 | Radio probe system | RPS-L11M | Automation | CNC lathe, turning center | P13 | SP-W10/P34 |
| 5 | Cable Probe | TP300/ TP310 | Automation | CNC grinding machine, CNC lathe, special measuring equipment, etc | P15/P17 | |
| 6 | Cable Probe | TP400 | Automation | CNC grinding machine, small CNC boring, milling machine, etc | P19 | |
| 7 | Trigger Probe | TP40/TP60 | Manual | Machining center, CNC boring and milling machine | P20/P21 | Don’t need software |
| 8 | Electric Probe | EP60/EP40 | Manual | Machining center, CNC boring and milling machine | P22/P23 | Don’t need software |

**Product selection table -2**

| No. | Name | Model | Working method | Type of machine | Page No. (Hard ware) | Page No. ( Software) |
|---|---|---|---|---|---|---|
| 1 | Wireless tool Setter | OTS-40/ RTS-20M | Automation | Machining center, CNC boring and milling machine | P25/P27 | SP-T10/P34 |
| 2 | Cable Tool Setter | TTC100/ TTC200 | Automation | Machining center, CNC boring and milling machine | P29/P30 | SP-T10/P34 |
| 3 | Cable Tool Setter | TTC400A | Automation | CNC lathe, turning center | P31 | SP-T10/P34 |
| 4 | Portable tool Setter | TTC10 | Manual | Machining center, CNC boring and milling machine | P32 | Don’t need software |




# INDEX

# OPS-20 Series Optical Probe System

## Composition of Probe System

OPS-20 series optical probe system include two pieces of hardware and one software package; The software package model is SP-W10, the two pieces of the hardware are:

1）OP500 series optical probe (including optional shank and stylus );

2）OSI-20 series optical receiver(the standard cable length 8m/the optional lengthened cable).


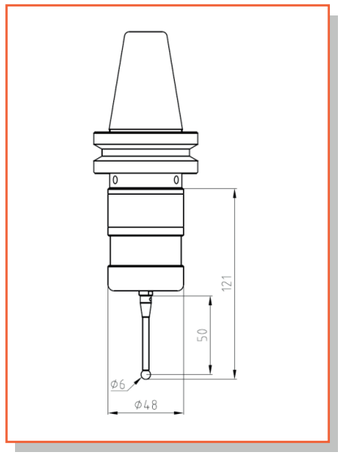


## Application

◆ Setting work-piece coordinate system and machining zero points automatically before processing;

◆ Detect and control the key dimensions, position coordinates and their precision automatically between two processes;

◆ Detect precision of the key dimensions, shapes, position after processing.

## Technical Parameters

1）The technical parameters of OP500 series optical probe :

◆ Stylus sensing direction: ±X, ±Y, +Z;

◆ Stylus sensing over-travel : X-Y±12° , Z +5 mm;

◆ The adjusting range of trigger force in Z direction: 500-1000 g;

◆ Trigger force in X-Y surface: 50g-100g;

◆ Unidirectional repeatability（2σ）: ≤ 1 μm;

◆ Optical signal receiving/sending distance : 5m;

◆ Working days of new batteries ( 5% utilization rate in a single shift): 140 days;

◆ Seal grade: IP68.

2） The technical parameters of OSI-20 series optical receiver:

◆ Optical signal receiving/sending distance: 5 m;

◆ Input voltage: 24V±10%( DC);

◆ Output load current: 50 mA;

◆ Seal grade: IP68.

## Technical Characteristics

◆ Probe switch on/off method: Rotate on/off, M code on/off;

◆ Infrared coded signals are used to transmit information between the probe and the receiver;

◆ Output four kinds of SSR signals to machine control system when probe is in the states of trigger, error, probe batteries low and output pulse;

◆ The OSI-20 series receiver can change its logical state of the output signal by setting;

◆ Double infrared signal receiving and transmitting devices are used to increase the reliability of the equipment;

◆ The LED lights in the receiver show the working status of the probe system.

## Applicable equipment

◆ Various specifications of machine center, CNC boring-milling machine, drilling machine center and so on.

◆ Various specifications of CNC lathes, turning machine center, CNC turning-milling machine center.






# OPS-20 Series Optical Probe System

## Subdivision model and function

1）OPS-20 probe system

◆ OP500 optical probe (Rotate on/off) ;

◆ OSI-10E optical receiver (with13 cores' shielded cable).

2）OPS-20M probe system

◆ OP500M optical probe (M code on/ off);

◆ OSI-20M13 optical receiver (with13 cores' shielded cable) .


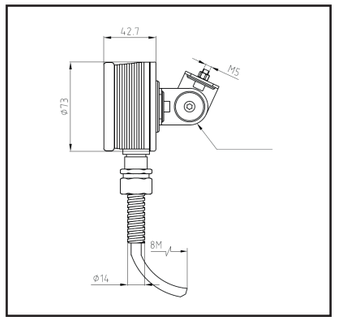


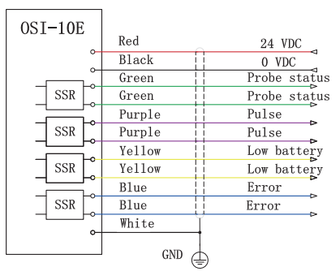


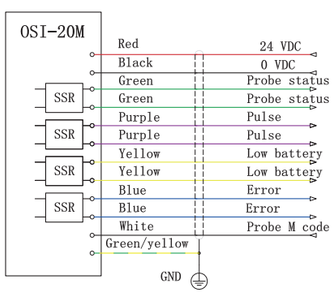


## Basic configuration of the probe system

1）OP500 Series probe

◆ Standard stylus model: M4-P50-RB6-S36;

◆ Battery specification: 14250, 3.6V, 1000mAh; 2 ps.;

◆ Usually, the probe shank is 7:24 taper shank with the BT or ISO standards , the common models are 30#,40#,50# and etc.; the shank with the HSK or other standards can also be used.

2）OSI-20 Series receiver

◆ The cable length usually is 8 meters;

◆ Fixed bracket with universal adjustment function is equipped.

## Notes:

◆ As for the software package, please consult the our sales staff about whether the CNC system of the machine tool can be equipped with probe; Some CNC systems needs additional settings to use probe;

◆ As for the probe' s taper shank, verify the standards and specifications of the spindle taper hole for the machine tool before ordering the probe; The taper shank with unusual standard or specification will lead to the probe price increase and the delivery time extend, The tapered shank we provided for the probe does not include the pull stud;

◆ As for function of the M code on/off, when purchasing the OPS-20M probe system, you should figure out whether there are two spare M codes in the CNC control system cabinet for the probe to use;

◆ As for special stylus, checking whether the standard stylus equipped with the OP500 series probe can meet the requirements and thinking whether it is necessary to order a special stylus;

◆ As for the cable length, verify if the 8-meter cable equipped with the OSI-20 receiver is enough for installing it in the machine tool. If it is not, the additional instruction is required when ordering the product.

# OPS-20MS Series Optical Probe System

## Composition of Probe System

OPS-20MS optical probe system include two pieces of hardware and one software package; The software package model is SP-W10, the two pieces of the hardware are:

1）OP500MS optical probe (including optional shank and stylus );

2）OSI-20M optical receiver(the standard cable length 8m/the optional lengthened cable).

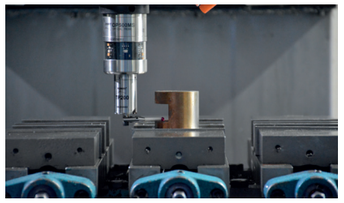


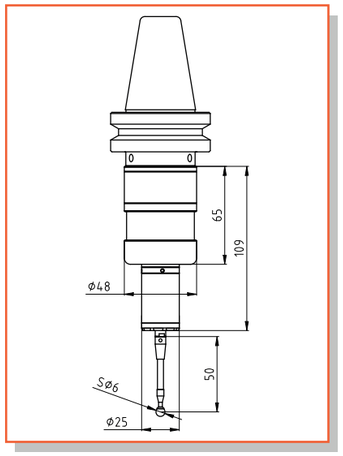


## Technical Parameters

1）The technical parameters of OP500MS series optical probe :

◆ Stylus sensing direction: ±X, ±Y, +Z;

◆ Stylus sensing over-travel : X-Y±12° , Z +5 mm;

◆ The trigger force in Z direction: 1000 g;

◆ Trigger force in X-Y surface: 100g-160g;

◆ Unidirectional repeatability（2σ）: ≤ 1μm;

◆ Optical signal receiving/sending distance : 5 m;

◆ Working days of new batteries ( 5% utilization rate in a single shift): 140 days;

◆ Seal grade: IP68.

2） The technical parameters of OSI-20M optical receiver:

◆ Optical signal receiving/sending distance: 5 m;

◆ Input voltage: 24V±10%( DC);

◆ Output load current: 50 mA;

◆ Seal grade: IP68.

## Technical Characteristics

◆ Probe switch on/off method: M code on/off;

◆ Infrared coded signals are used to transmit information between the probe and the receiver;

◆ Output four kinds of SSR signals to machine control system when probe is in the states of trigger, error, probe batteries low and output pulse;

◆ The OSI-20Mreceiver can change its logical state of the output signal by setting;

◆ Double infrared signal receiving and transmitting devices are used to increase the reliability of the equipment;

◆ The LED lights in the receiver show the working status of the probe system.

## Application

◆ Setting work-piece coordinate system and machining zero points automatically before processing;

◆ Detect and control the key dimensions, position coordinates and their precision automatically between two processes;

◆ Detect precision of the key dimensions, shapes, position after processing.

## Applicable equipment

◆ Various specifications of machine center, CNC boring-milling machine, drilling machine center and so on.

◆ Various specifications of CNC lathes, turning machine center, CNC turning-milling machine center.






# OPS-20MS Series Optical Probe System

## Basic configuration of the probe system

1）OP500MS probe

◆ Standard stylus model: M4-P50-RB6-S36;

◆ Extendable main body

◆ Battery specification: 14250, 3.6V, 1000mAh; 2 ps.;

◆ Usually, the probe shank is 7:24 taper shank with the BT or ISO standards , the common models are 30#,40#,50# and etc.; the shank with the HSK or other standards can also be used.

2）OSI-20M receiver

◆ The cable length usually is 8 meters;

◆ Fixed bracket with universal adjustment function is equipped.


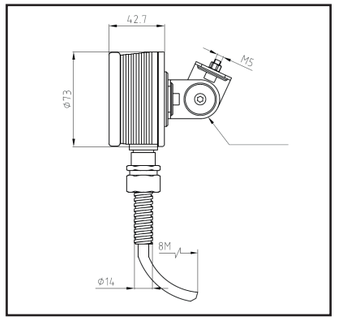


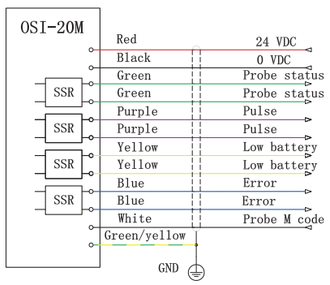


## Notes:

◆ As for the software package, please consult the our sales staff about whether the CNC system of the machine tool can be equipped with probe; Some CNC systems needs additional settings to use probe;

◆ As for the probe’s taper shank, verify the standards and specifications of the spindle taper hole for the machine tool before ordering the probe; The taper shank with unusual standard or specification will lead to the probe price increase and the delivery time extend, The tapered shank we provided for the probe does not include the pull stud;

◆ As for function of the M code on/off, when purchasing the OPS-20 probe system, you should figure out whether there are two spare M codes in the CNC control system cabinet for the probe to use;

◆ As for special stylus, checking whether the standard stylus equipped with the OP500 series probe can meet the requirements and thinking whether it is necessary to order a special stylus;

◆ As for the cable length, verify if the 8-meter cable equipped with the OSI-20 receiver is enough for installing it in the machine tool. If it is not, the additional instruction is required when ordering the product;

# OPS-30 Series Optical Probe System

## Composition of Probe System

OPS-30 series optical probe system include two pieces of hardware and one software package; The software package model is SP-W10, the two pieces of the hardware are:

1）OP510 series optical probe (including optional shank and stylus );

2）OSI-20 series optical receiver(the standard cable length 8m/the optional lengthened cable).

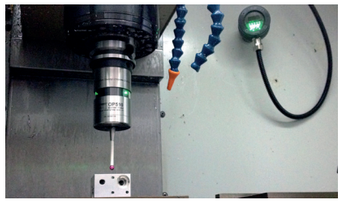


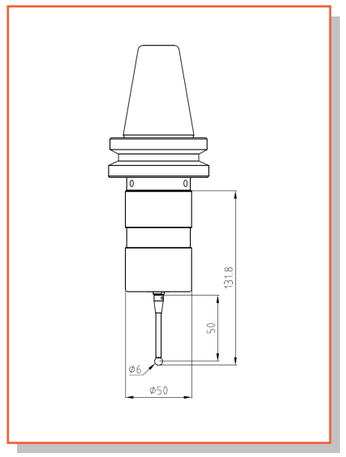


## Application

◆ Setting work-piece coordinate system and machining zero points automatically before processing;

◆ Detect and control the key dimensions, position coordinates and their precision automatically between two processes;

◆ Detect precision of the key dimensions, shapes, position after processing.

## Technical Parameters

1）The technical parameters of OP510 series optical probe :

◆ Stylus sensing direction: ±X, ±Y, +Z;

◆ Stylus sensing over-travel : X-Y±12° , Z +5 mm;

◆ The adjusting range of trigger force in Z direction: 700g;

◆ Trigger force in X-Y surface: 50g-100g;

◆ Unidirectional repeatability（2σ）: ≤ 1 μm;

◆ Optical signal receiving/sending distance : 5 m;

◆ Working days of new batteries ( 5% utilization rate in a single shift): 140 days;

◆ Seal grade: IP 68.

2） The technical parameters of OSI-20 optical receiver:

◆ Optical signal receiving/sending distance: 5 m;

◆ Input voltage: 24V±10% (DC);

◆ Output load current: 50 mA;

◆ Seal grade: IP68.

## Technical Characteristics

◆ Infrared coded signals are used to transmit information between the probe and the receiver;

◆ Output four kinds of SSR signals to machine control system when probe is in the states of trigger, error, probe batteries low and output pulse;

◆ The OSI-20 series receiver can change its logical state of the output signal by setting;

◆ Double infrared signal receiving and transmitting devices are used to increase the reliability of the equipment;

◆ The LED lights in the receiver show the working status of the probe system.

## Applicable equipment

◆ Various specifications of machine center, CNC boring-milling machine, drilling machine center and so on.

◆ Various specifications of CNC lathes, turning machine center, CNC turning-milling machine center.






# OPS-30 Series Optical Probe System

## Basic configuration of the probe system

1）OP510 Series probe

◆ Standard stylus model: M4-P50-RB6-S36;

◆ Battery specification: 14250, 3.6V, 1000mAh; 2 ps.;

◆ Usually, the probe shank is 7:24 taper shank with the BT or ISO standards , the common models are 30#,40#,50# and etc.; the shank with the HSK or other standards can also be used.

2）OSI-20 Series receiver

◆ The cable length usually is 8 meters;

◆ Fixed bracket with universal adjustment function is equipped.


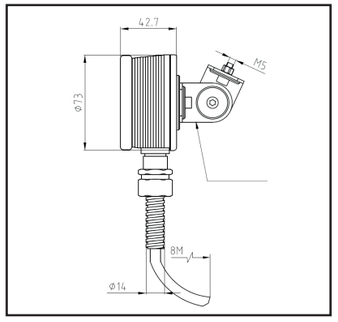


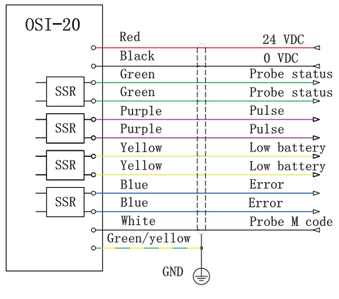


## Notes:

◆ As for the software package, please consult the our sales staff about whether the CNC system of the machine tool can be equipped with probe; Some CNC systems needs additional settings to use probe;

◆ As for the probe’ s taper shank, verify the standards and specifications of the spindle taper hole for the machine tool before ordering the probe; The taper shank with unusual standard or specification will lead to the probe price increase and the delivery time extend, The tapered shank we provided for the probe does not include the pull stud;

◆ As for function of the M code on/off, when purchasing the OPS-30 probe system, you should figure out whether there are two spare M codes in the CNC control system cabinet for the probe to use;

◆ As for special stylus, checking whether the standard stylus equipped with the OP500 series probe can meet the requirements and thinking whether it is necessary to order a special stylus;

◆ As for the cable length, verify if the 8-meter cable equipped with the OSI-20 receiver is enough for installing it in the machine tool. If it is not, the additional instruction is required when ordering the product;

# OPS-40 Series Optical Probe System

## Composition of Probe System

OPS-40 series optical probe system include two pieces of hardware and one software package; the two pieces of the hardware are:

1) OP400 series optical probe (including optional shank and stylus );

2) OSI-30 series optical receiver(the standard cable length 8m/the optional lengthened cable).

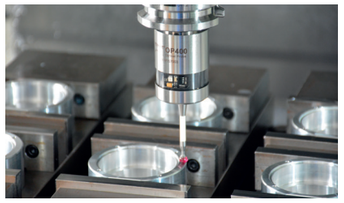


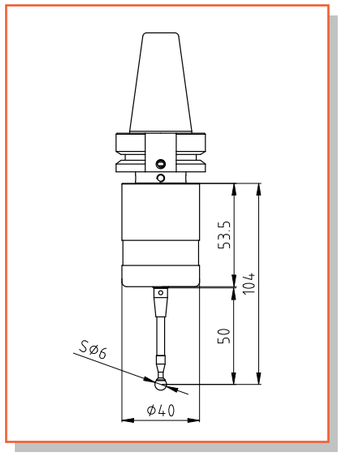


## Technical Parameters

1) The technical parameters of OP400 series optical probe :

◆ Stylus sensing direction: ±X, ±Y, +Z;

◆ Stylus sensing over-travel : X-Y±12° , Z +5 mm;

◆ The adjusting range of trigger force in Z direction: 750 g;

◆ Trigger force in X-Y surface: 50g-100g;

◆ Unidirectional repeatability（2σ）: ≤ 1 μm;

◆ Optical signal receiving/sending distance : 3 m;

◆ Working days of new batteries ( 5% utilization rate in a single shift): 90-140 days;

◆ Seal grade: IP68.

2) The technical parameters of OSI-30 series optical receiver:

◆ Optical signal receiving/sending distance: 3 m;

◆ Input voltage: 24V±10% (DC);

◆ Output load current: 50 mA;

◆ Seal grade: IP68.

## Technical Characteristics

◆ Probe switch on/off method: Rotate on/off, M code on/off;

◆ Infrared coded signals are used to transmit information between the probe and the receiver;

◆ Output four kinds of SSR signals to machine control system when probe is in the states of trigger, error, probe batteries low and output pulse;

◆ The OSI-30 series receiver can change its logical state of the output signal by setting;

◆ Double infrared signal receiving and transmitting devices are used to increase the reliability of the equipment;

◆ The LED lights in the receiver show the working status of the probe system.

## Application

◆ Setting work-piece coordinate system and machining zero points automatically before processing;

◆ Detect and control the key dimensions, position coordinates and their precision automatically between two processes;

◆ Detect precision of the key dimensions, shapes, position after processing.

## Applicable equipment

◆ Various specifications of machine center, CNC boring-milling machine, drilling machine center and so on.

◆ Various specifications of CNC lathes, turning machine center, CNC turning-milling machine center.






# OPS-40 Series Optical Probe System

## Basic configuration of the probe system

1) OP400 Series probe

◆ Standard stylus model: M4-P50-RB6-S36;

◆ Battery specification: 14250, 3.6V, 1000mAh; 2 ps.;

◆ Usually, the probe shank is 7:24 taper shank with the BT or ISO standards , the common models are 30#,40#,50# and etc.; the shank with the HSK or other standards can also be used.

2) OSI-30 Series receiver

◆ The cable length usually is 8 meters;

◆ Fixed bracket with universal adjustment function is equipped.


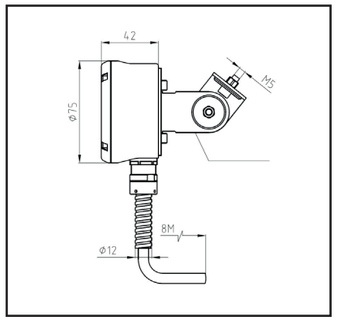


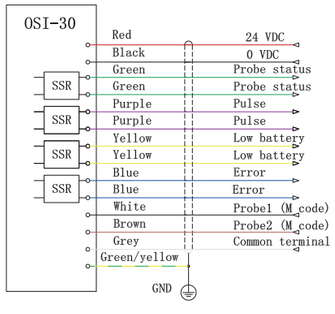


## Notes:

◆ As for the software package, please consult the our sales staff about whether the CNC system of the machine tool can be equipped with probe; Some CNC systems needs additional settings to use probe;

◆ As for the probe' s taper shank, verify the standards and specifications of the spindle taper hole for the machine tool before ordering the probe; The taper shank with unusual standard or specification will lead to the probe price increase and the delivery time extend, The tapered shank we provided for the probe does not include the pull stud;

◆ As for function of the M code on/off, when purchasing the OPS-40 probe system, you should figure out whether there are two spare M codes in the CNC control system cabinet for the probe to use;

◆ As for special stylus, checking whether the standard stylus equipped with the OP400 series probe can meet the requirements and thinking whether it is necessary to order a special stylus;

◆ As for the cable length, verify if the 8-meter cable equipped with the OSI-30 receiver is enough for installing it in the machine tool. If it is not, the additional instruction is required when ordering the product;

# RPS-20M Radio Probe System

## Composition of Probe System

RPS-20M radio probe system include two pieces of hardware and one software package; The software package model is SP-W10, the two pieces of the hardware are:

1）RP610M radio probe (including optional shank and stylus );

2）RSI-20D radio receiver(the standard cable length 8m/the optional lengthened cable).

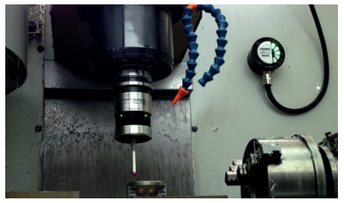


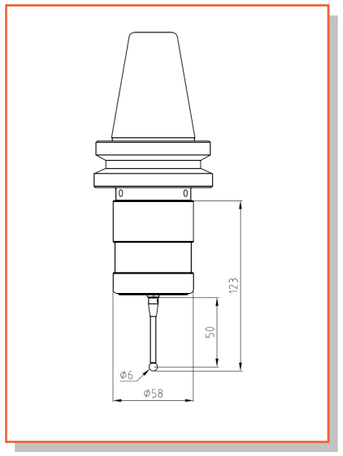


## Application

◆ Setting work-piece coordinate system and machining zero points automatically before processing;

◆ Detect and control the key dimensions, position coordinates and their precision automatically between two processes;

◆ Detect precision of the key dimensions, shapes, position after processing.

## Technical Parameters

1）The technical parameters of RP610M radio probe :

◆ Stylus sensing direction: ±X, ±Y, +Z;

◆ Stylus sensing over-travel : X-Y±12°, Z +5 mm;

◆ The adjusting range of trigger force in Z direction: 500-1000 g;

◆ Trigger force in X-Y surface: 100g-160g;

◆ Unidirectional repeatability（2σ）: ≤ 1 μm;

◆ Radio signal receiving/sending distance : ≤ 14 m;

◆ Working days of new batteries ( 5% utilization rate in a single shift):280-320 days;

◆ Seal grade: IP68.

2）RSI-20D radio receiver technical parameters:

◆ Radio signal receiving/sending distance: ≤ 14 m;

◆ Input voltage is 24V±10% ( DC) and output load current is 50 mA.

## Technical Characteristics

◆ Probe switch on/off method：M code on/off;

◆ Radio code signals are used to transmit information between the probe and the receiver. The time to transmit and to decode a group of signals is less than 1ms;

◆ The transmission frequency of the radio signal is within 2.4 G-2.483 G, the number of transmission channel is 16;

◆ Output four kinds of SSR signals to machine control system when probe is in the states of trigger、error、probe batteries low and output pulse;

◆ The RSI-20D receiver can change its logical state of the output signal by setting;

◆ The LED lights in the receiver show the working status of the probe system.

## Applicable equipment

◆ Various specifications of machine center, CNC boring-milling machine, drilling machine center and so on.

◆ Various specifications of CNC lathes, turning machine center, CNC turning-milling machine center.






# RPS-20M Radio Probe System

## Basic configuration

1）RP610M Probe

◆ Standard stylus model: M4-P50-RB6-S36;

◆ Battery specification: 14250, 3.6V, 1000mAh; 2 ps.;

◆ Usually, the probe shank is 7:24 taper shank with the BT or ISO standards , the common models are 30#,40#,50# and etc.; the shank with the HSK or other standards can also be used.

2）RSI-20D Receiver

◆ The cable length usually is 8 meters with13 cores' shielded cable;

◆ Fixed bracket with universal adjustment function is equipped.


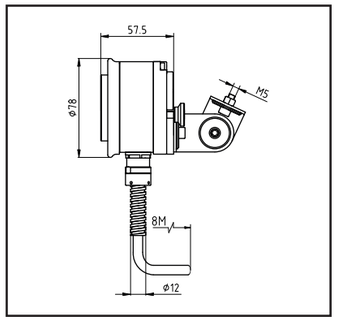


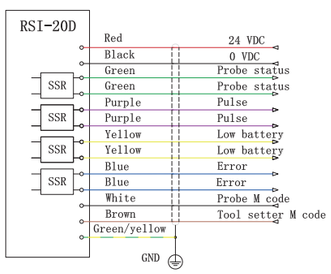


## Notes:

◆ As for the software package, please consult the our sales staff about whether the CNC system of the machine tool can be equipped with probe; Some CNC systems needs additional settings to use probe;

◆ As for the probe' s taper shank, verify the standards and specifications of the spindle taper hole for the machine tool before ordering the probe; The taper shank with unusual standard or specification will lead to the probe price increase and the delivery time extend, The tapered shank we provided for the probe does not include the pull stud;

◆ As for function of the M code on/off, when purchasing the RPS-20M probe system, you should figure out whether there are two spare M codes in the CNC control system cabinet for the probe to use;

◆ As for special stylus, checking whether the standard stylus equipped with the RP610M probe can meet the requirements and thinking whether it is necessary to order a special stylus;

◆ As for the cable length, verify if the 8-meter cable equipped with the RSI-20 receiver is enough for installing it in the machine tool. If it is not, the additional instruction is required when ordering the product;

# RPS-20MS Radio Probe System

## Composition of Probe System

RPS-20MS radio probe system include two pieces of hardware and one software package; the two pieces of the hardware are:
1）RP610MS radio probe (including optional shank and stylus );
2）RSI-20D radio receiver(the standard cable length 8m/the optional lengthened cable).

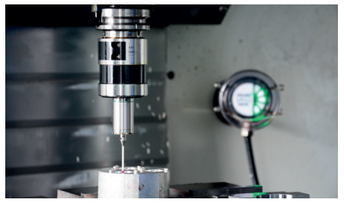


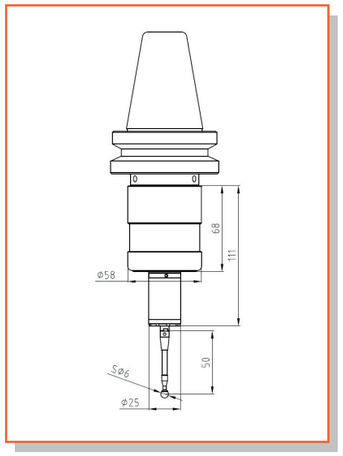


## Technical Parameters

1）The technical parameters of RP610MS radio probe :
◆ Stylus sensing direction: ±X, ±Y, +Z;
◆ Stylus sensing over-travel : X-Y±12°, Z +5 mm;
◆ The adjusting range of trigger force in Z direction: 1000 g;
◆ Trigger force in X-Y surface: 100g-160g;
◆ Unidirectional repeatability（2σ）: ≤ 1 μm;
◆ Radio signal receiving/sending distance : ≤ 14 m;
◆ Working days of new batteries ( 5% utilization rate in a single shift): 280-350 days;
◆ Extendable length of the main body:50/100/150/200(mm);
◆ Seal grade: IP68.
2）RSI-20D radio receiver technical parameters:
◆ Radio signal receiving/sending distance: ≤ 14 m;
◆ Input voltage is 24V±10% (DC) and output load current is 50 mA.

## Technical Characteristics

◆ Probe switch on/off method:M code on/off;
◆ Radio code signals are used to transmit information between the probe and the receiver. The time to transmit and to decode a group of signals is less than 1ms;
◆ The transmission frequency of the radio signal is within 2.4 G-2.483 G, the number of transmission channel is 16;
◆ Output four kinds of SSR signals to machine control system when probe is in the states of trigger、error、probe batteries low and output pulse;
◆ The RSI-20D receiver can change its logical state of the output signal by setting;
◆ The LED lights in the receiver show the working status of the probe system.

## Application

◆ Setting work-piece coordinate system and machining zero points automatically before processing;
◆ Detect and control the key dimensions, position coordinates and their precision automatically between two processes;
◆ Detect precision of the key dimensions, shapes, position after processing.

## Applicable equipment

◆ Various specifications of machine center, CNC boring-milling machine, drilling machine center and so on.
◆ Various specifications of CNC lathes, turning machine center, CNC turning-milling machine center.






# RPS-20MS Radio Probe System

## Basic configuration

1）RP610MS Probe
◆ Standard stylus model: M4-P50-RB6-S36;
◆ Extendable main body
◆ Battery specification: 14250, 3.6V, 1000mAh; 2 ps.;
◆ Usually, the probe shank is 7:24 taper shank with the BT or ISO standards , the common models are 30#,40#,50# and etc.; the shank with the HSK or other standards can also be used.
2）RSI-20D Receiver
◆ The cable length usually is 8 meters with13 cores' shielded cable;
◆ Fixed bracket with universal adjustment function is equipped.


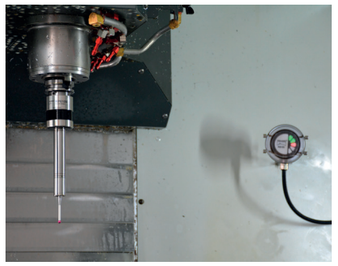

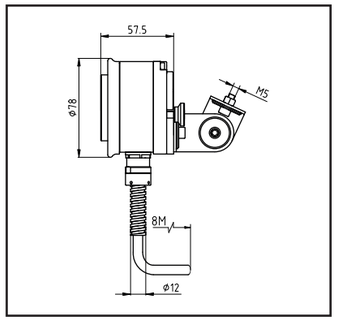


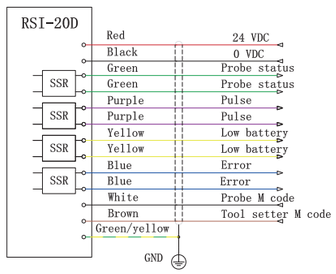


## Notes:

◆ As for the software package, please consult the our sales staff about whether the CNC system of the machine tool can be equipped with probe; Some CNC systems needs additional settings to use probe;
◆ As for the probe' s taper shank, verify the standards and specifications of the spindle taper hole for the machine tool before ordering the probe; The taper shank with unusual standard or specification will lead to the probe price increase and the delivery time extend, The tapered shank we provided for the probe does not include the pull stud;
◆ As for function of the M code on/off, when purchasing the RPS-20M probe system, you should figure out whether there are two spare M codes in the CNC control system cabinet for the probe to use;
◆ As for special stylus, checking whether the standard stylus equipped with the RP610MS probe can meet the requirements and thinking whether it is necessary to order a special stylus;
◆ As for the cable length, verify if the 8-meter cable equipped with the RSI-20D receiver is enough for installing it in the machine tool. If it is not, the additional instruction is required when ordering the product;

# RPS-L11M Radio Probe System

## Composition of Probe System

1) TP200 trigger probe unit(including optional stylus);
2) RPD/RPDM radio signal transmitter (including customizable mounting plate);
3) RSI-20D radio receiver(the standard cable length 8m/the optional lengthened cable);
4) Software package.


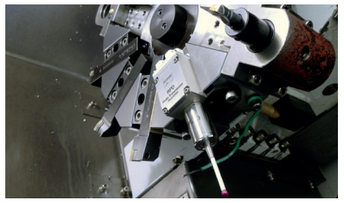

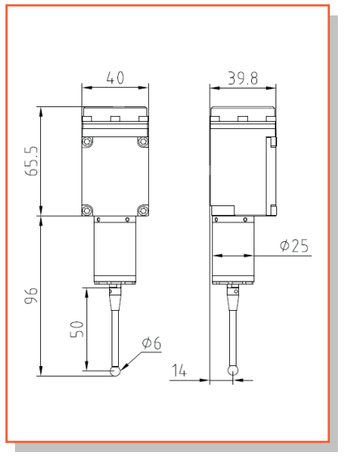


## Technical Parameters

1) The technical parameters of TP200 trigger probe :
◆ Stylus sensing direction: ±X, ±Y, +Z;
◆ Stylus sensing over-travel : X-Y±12°, Z +5 mm;
◆ The trigger force in Z direction: 1000 g;
◆ Trigger force in X-Y surface ( standard stylus ) : 100-160g;
◆ Unidirectional repeatability（2σ）: ≤ 1 μm;
◆ Seal grade: IP68.
2) The technical parameters of RPDM radio signal transmitter:
◆ Radio signal receiving/sending distance : ≤ 14 m;
◆ Working days of new batteries (5% utilization rate in a single shift):280-320 days;
◆ Seal grade: IP68.
3) RSI-20D radio receiver technical parameters:
◆ Radio signal receiving/sending distance: ≤ 14 m;
◆ Input voltage is 24V±10% (DC) and output load current is 50 mA.
◆ Seal grade: IP68.

## Technical Characteristics

◆ The stylus connector of TP200 probe is protected by a metal cover and a rubber seal cover;
◆ Switch on/off method of RPDM radio signal emitter: M code on/off;
◆ Radio code signals are used to transmit information between RPDM radio signal emitter and the receiver. The time to transmit and to decode a group of signals is less than 1ms;
◆ The transmission frequency of the radio signal is within 2.4 G-2.483 G, the number of transmission channel is 16;
◆ Output four kinds of SSR signals to machine control system when probe is in the states of trigger、error、probe batteries low and output pulse;
◆ The RSI-20D receiver can change its logical state of the output signal by setting;

## Application

◆ Setting work-piece coordinate system and machining zero points automatically before processing;
◆ Detect and control the key dimensions, position coordinates and their precision automatically between two processes;
◆ Detect precision of the key dimensions, shapes, position after processing.

## Applicable equipment

◆ Various specifications of machine center, CNC boring-milling machine, drilling machine center and so on.
◆ Various specifications of CNC lathes, turning machine center, CNC turning-milling machine center.






# RPS-L11M Radio Probe System

## Basic configuration

1) TP200 Probe
◆ Standard stylus model: M4-P50-RB6-S36;
2) RPDM signal transmitter
◆ Battery specification: 14250, 3.6V, 1000mAh, 2 ps.;
◆ The mounting plate is usually designed and made according to the specifications of customers' lathe carriages.
2) RSI-20D Receiver
◆ The cable length usually is 8 meters with13 cores' shielded cable;
◆ Fixed bracket with universal adjustment function is equipped.


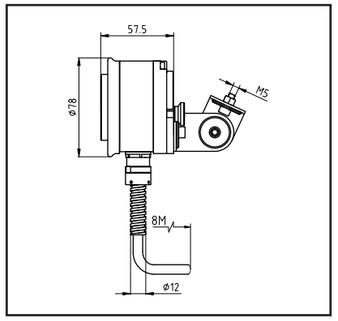


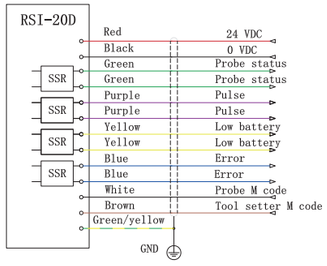


## Notes:

◆ As for the software package, please consult the our sales staff about whether the CNC system of the machine tool can be equipped with probe; Some CNC systems needs additional settings to use probe;
◆ As for the mounting plate, users shall first provide us the structure diagram and specific size of the CNC lathe carriage, then we will decide whether the mounting plate of RPDM needs to be designed and manufactured all alone;
◆ As for function of the M code on/off, when purchasing the RPS-L11M probe system, you should figure out whether there are two spare M codes in the CNC control system cabinet for the probe to use;
◆ As for special stylus, checking whether the standard stylus equipped with the TP200 probe can meet the requirements and thinking whether it is necessary to order a special stylus;
◆ As for the cable length, verify if the 8-meter cable equipped with the RSI-20 receiver is enough for installing it in the machine tool. If it is not, the additional instruction is required when ordering the product;

# TP300 series of cable probe

## Composition of Probe

TP300 series of cable probe consist of three pieces:
1）TP300 trigger probe;
2）HPI-A16 (axial outlet) or HPI-R16 (radial outlet) probe shank containing the probe’s interface and cable;
3）Stylus(standard model：M4-P50-RB6-S36)


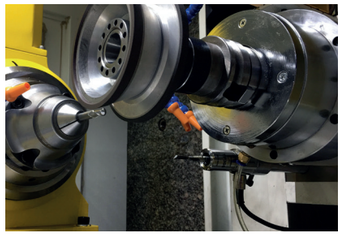

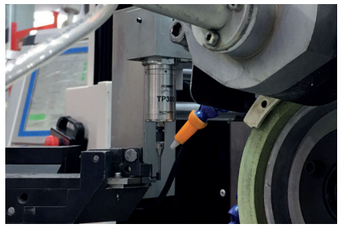

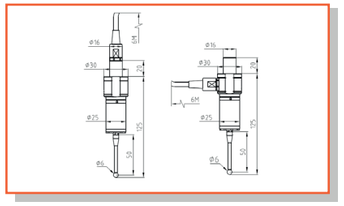

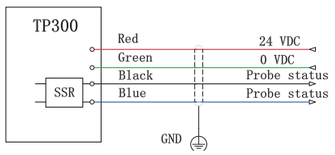


## Technical Parameters

1）The technical parameters of TP300 trigger probe :
◆ Stylus sensing direction: ±X, ±Y, +Z;
◆ Stylus sensing over-travel : X-Y±12° , Z +5 mm;
◆ The trigger force in Z direction: 1000 g;
◆ Trigger force in X-Y surface ( standard stylus ) : 100-160g;
◆ Unidirectional repeatability（2σ）: ≤ 1 μm;
◆ Seal grade: IP68.
2）The technical parameters of probe’s interface:
◆ Input voltage is 24V±10% (DC) and output load current is 50 mA.
◆ Seal grade: IP68.

## Technical Characteristics

◆ The signal interface of probe is integrated inside the probe shank, and the trigger signal is transmitted by cable;
◆ By changing the power supply’s polarity at the probe interface, the logic state of the output signal can be reversed;
◆ The stylus connector of the probe is protected by double layers of rubber seal.

## Application

◆ Setting work-piece coordinate system and machining zero points automatically before processing;
◆ Detect and control the key dimensions, position coordinates and their precision automatically between two processes;
◆ Detect precision of the key dimensions, shapes, position after processing.
◆ Applicable equipments: various specifications of CNC grinding machines, CNC lathes and specially measuring devices.

## Applicable equipment

◆ Various specifications of CNC grinding machines, CNC lathes and special measuring devices
◆ Probe with ruby ball stylus and protector rod, commonly used in milling machines and cylindrical grinding machines
◆ Probe with a profiled stylus, often used in tool grinding machines.






# TP200 trigger probe

## Characteristics of Probe

The TP200 probe has a flexible installation method and is suitable for CNC lathes and machining centers. It can be customized with various types of styli and accessories. The probe is sealed with metal cover and rubber, which has stronger protection performance.


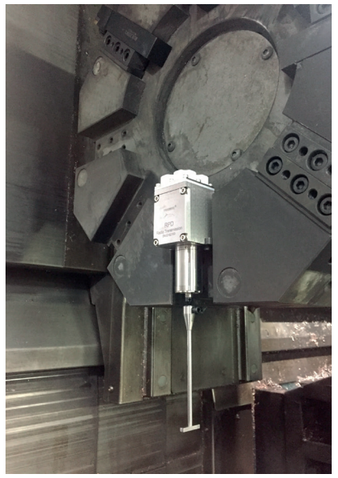

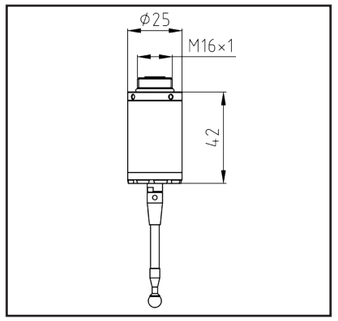


## Technical Parameters

The technical parameters of TP200 trigger probe :
◆ Stylus sensing direction: ±X, ±Y, +Z;
◆ Stylus sensing over-travel : X-Y±12° , Z +5 mm;
◆ The trigger force in Z direction: 1000 g;
◆ Trigger force in X-Y surface ( stylus length 50mm ) : 100-160g;
◆ Unidirectional repeatability（2σ）: ≤ 1 μm;
◆ Seal grade: IP68.

## Technical Characteristics

◆ It forms a cable transmission measurement system with a probe shank. Such as TP300 and TP400 probe.
◆ Used in combination with OP500MS and RP610MS to form a measurement system that does not require direct connection, and upgrade and transform the original equipment.Such as OPS-20MS and RPS-20MS.
◆ Combined with the radio signal transmitter to form a radio transmission measurement system. Such as RPS-L11M.

## Application

◆ Installed on a horizontal machine tool, it is used for workpiece measurement, tool setting and tool damage detection;
◆ Installed on a CNC machining center,it is used for workpiece measurement .

# TP310 series of cable probe

## Composition of Probe

TP3010 series of cable probe consist of three pieces:
1) TP310 trigger probe;
2) Probe shank containing the probe’s interface and cable (axial outlet or radial outlet) ;
3) Stylus(standard model：M4-P50-RB6-S36)

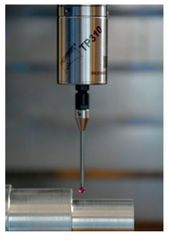

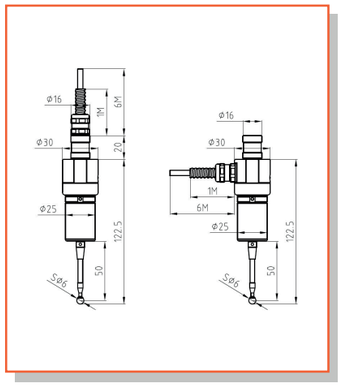


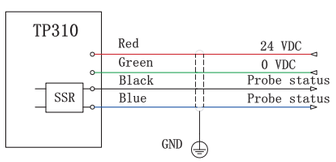


## Technical Parameters

1) The technical parameters of TP310 trigger probe :
◆ Stylus sensing direction: ±X, ±Y, +Z;
◆ Stylus sensing over-travel : X-Y±12° , Z +5 mm;
◆ The trigger force in Z direction: 1000 g;
◆ Trigger force in X-Y surface ( standard stylus ) : 100-160g;
◆ Unidirectional repeatability（2σ）: ≤ 1 μm;
◆ Seal grade: IP68.
2) The technical parameters of probe’s interface:
◆ Input voltage is 24V±10%(DC) and output load current is 50 mA.
◆ Seal grade: IP68.

## Technical Characteristics

◆ The signal interface of probe is integrated inside the probe shank, and the trigger signal is transmitted by cable;
◆ By changing the power supply’s polarity at the probe interface, the logic state of the output signal can be reversed;
◆ The stylus connector of the probe is protected by double layers of rubber seal.
◆ Adopting stainless steel sheath for protection, suitable for harsh working environments.

## Application

◆ Setting work-piece coordinate system and machining zero points automatically before processing;
◆ Detect and control the key dimensions, position coordinates and their precision automatically between two processes;
◆ Detect precision of the key dimensions, shapes, position after processing.

## Applicable equipment

◆ Various specifications of CNC grinding machines, CNC lathes and special measuring devices;
◆ Probe with ruby ball stylus and protector rod, commonly used in milling machines and cylindrical grinding machines;
◆ Probe with a profiled stylus, often used in tool grinding machines.






# TP210 trigger probe

## Characteristics of Probe

The TP210 probe has a flexible installation method and is suitable for CNC lathes and machining centers. It can be customized with various types of styli and accessories. The probe is sealed with metal cover and rubber, which has stronger protection performance.

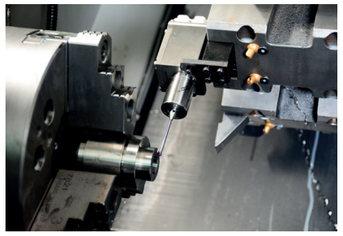

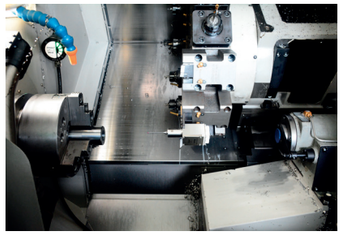

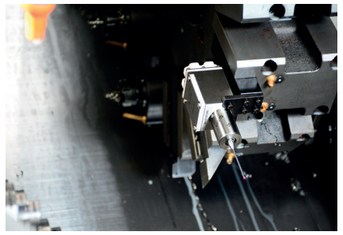

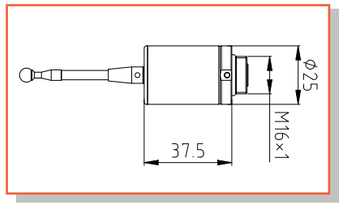


## Technical Parameters

The technical parameters of TP300 trigger probe :
◆ Stylus sensing direction: ±X, ±Y, +Z;
◆ Stylus sensing over-travel : X-Y±12° , Z +5 mm;
◆ The trigger force in Z direction: 1000 g;
◆ Trigger force in X-Y surface ( standard stylus ) : 100-160g;
◆ Unidirectional repeatability（2σ）: ≤ 1 μm;
◆ Seal grade: IP68.

## Technical Characteristics

It forms a cable transmission measurement system with a probe shank. Such as TP 310
Used in combination with OP500MS and RP610MS to form a measurement sys tem that does not require direct connection, and upgrade and transform the or iginal equipment.
Combined with the radio signal transmitter to form a radio transmission measurem ent system.

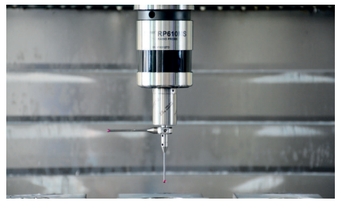

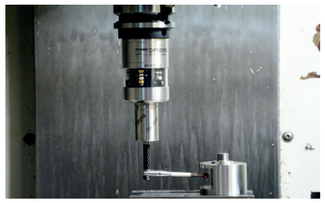

## Application

Installed on a horizontal machine tool, it is used for workpiece measurement, tool s etting and tool damage detection;
Installed on a CNC machining center,it is used for workpiece measurement .

# TP400 cable probe

## Composition of Probe

TP400 cable probe consist of three pieces:
1) TP400 trigger probe unit(with integrating interface);
2) Two four-core, oil proof shielded cable, one of them is a spiral cable with aviation plugs at both ends. The total length of the two cables is 8 meters;
3) Stylus(standard model: M4-P50-RB6-S36).


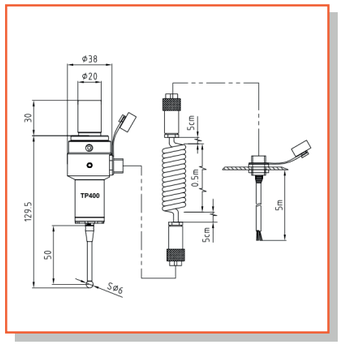


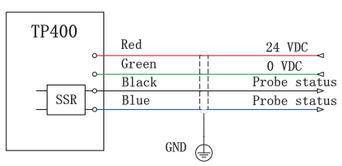


## Technical Parameters for probe and interface

◆ Stylus sensing direction: ±X, ±Y, +Z;
◆ Stylus sensing over-travel : X-Y±12° , Z +5 mm;
◆ The trigger force in Z direction: 1000 g;
◆ Trigger force in X-Y surface ( standard stylus ) : 65-130g;
◆ Unidirectional repeatability（2σ）: ≤ 1 μm;
◆ Input voltage is 24V±10%(DC) and output load current is 50 mA.
◆ Seal grade: IP68.

## Technical Characteristics

◆ The signal interface of probe is integrated inside the probe, and the trigger signal is transmitted by cable;
◆ By changing the power supply' s polarity at the probe interface, the logic state of the output signal can be reversed;
◆ The stylus connector of the probe is protected by double layers of rubber seal.
◆ The probe uses two pieces of cable to transmit signals, one of spiral cable has aviation plugs at both ends , which can be quickly installed and discounted, providing convenience for the application of the probe in different equipments.

## Application

◆ Setting work-piece coordinate system and machining zero points automatically before processing;
◆ Detect and control the key dimensions, position coordinates and their precision automatically between two processes;
◆ Detect precision of the key dimensions, shapes, position after processing.
Applicable equipments:

## Applicable equipment and conditions

◆ Various specifications of CNC grinding machines, CNC lathes and specially measuring devices.

## Notes for purchase

◆ As for special stylus, check whether the standard stylus equipped with the TP400 probe can meet the requirements and whether it is necessary to order special stylus;
◆ About sealing protection of the connectors for stylus and probe: for TP400 probe applied in CNC lathe, it is recommended that the customer give protecting instruction to use metal cover + rubber sealing cover when ordering the probe.






# TP40 trigger probe

## Composition of Probe

1) TP40 trigger probe;
2) Z20 straight shank;
3) Stylus(standard model: M4-P40-RB4-S30).

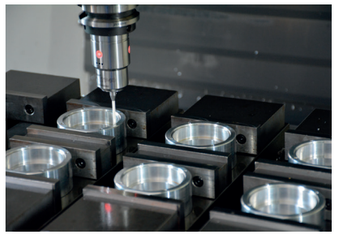


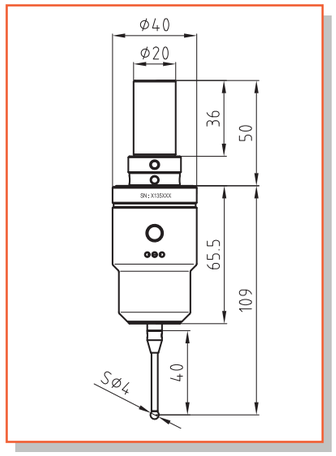


## Technical Parameters for probe and interface

◆ Stylus sensing direction: ±X, ±Y, +Z;
◆ Stylus sensing over-travel : X-Y±12° , Z +5 mm;
◆ The trigger force in Z direction: 400 g;
◆ Trigger force in X-Y surface ( standard stylus ) : 30-60g;
◆ Unidirectional repeatability（2σ）: ≤ 1 μm;
◆ Working days of rechargeable battery (5% usage rate per shift): 185 days;
◆ Seal grade: IP 67.

## Technical Characteristics

◆ Standard configuration：φ20mm straight shank;
◆ Using LED and buzzer to indicate the triggering status of the probe;
◆ Adopting lithium battery charging technology without battery replacement.

## Application

◆ Setting work-piece coordinate system and machining zero points automatically before processing;
◆ Detect and control the key dimensions, position coordinates and their precision automatically between two processes;
◆ Detect precision of the key dimensions, shapes, position after processing.

## Basic configuration

◆ Stylus standard model: M4-P40-RB4-S30;
◆ Z20 straight shank;
◆ Power supply wire：Type-C;
◆ Signal extended cable.

## Notes for purchase

◆ As for special stylus, check whether the standard stylus equipped with the TP40 probe can meet the requirements and whether it is necessary to order special stylus;
◆ About signal extended cable，it can provide SSR signals for the machine tool，but the seal grade will decrease.

# TP60 trigger probe

## Composition of Probe

TP60 trigger probe consist of three pieces:
1）TP60 trigger probe main body(with battery compartment);
2）The probe shank is 7:24 taper shank with the BT or ISO standards ;
3）Stylus(standard model: M4-P50-RB6-S36).

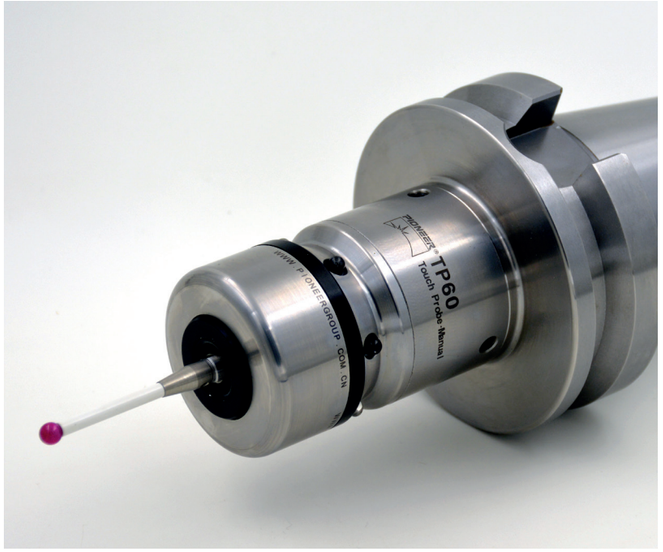


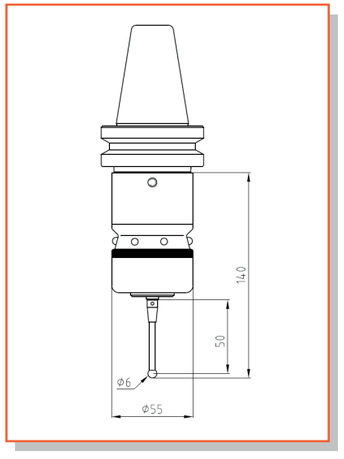


## Technical Parameters for probe and interface

◆ Stylus sensing direction: ±X, ±Y, +Z;
◆ Stylus sensing over-travel : X-Y±12° , Z +5 mm;
◆ The trigger force in Z direction: 1000 g;
◆ Trigger force in X-Y surface ( standard stylus ) : 65-130g;
◆ Unidirectional repeatability（2σ）: ≤ 1 μm;
◆ Battery specification: CR2, 3.0V,800mAh; 1 ps.;
◆ Seal grade: IP 67.

## Technical Characteristics

◆ Coaxial adjustment function of probe and shank:
By adjusting the connecting link between the main body of the probe and the taper shank, coaxiality about the center of the measuring ball on the stylus and the center line of the taper shank can be adjusted;
◆ Six LED indicator lights are used to show the trigger state of the probe.

## Notes for purchase

◆ As for special stylus, check whether the standard stylus equipped with the TP60 probe can meet the requirements and whether it is necessary to order special stylus;
◆ As for the probe taper shank, verify the taper hole’s standards and specifications of the machine tool spindle before ordering the probe; The uncommonly used standard and specifications of the taper shank will lead to the increase of probe price and the delay of delivery time, The taper shank provided by us for the probe isn’t equipped with the pull stud.

## Application

◆ Setting work-piece coordinate system and machining zero points automatically before processing;
◆ Detect and control the key dimensions, position coordinates and their precision automatically between two processes;
◆ Detect precision of the key dimensions, shapes, position after processing.
◆ Suitable for workpiece measurement of various solid materials






# EP40 electric probe

## Composition of Probe

1）EP40 electric conducting probe main body（with battery compartment）;
2）Z20 straight shank;
3）Stylus(standard model: M4-S40-CB4-S28).

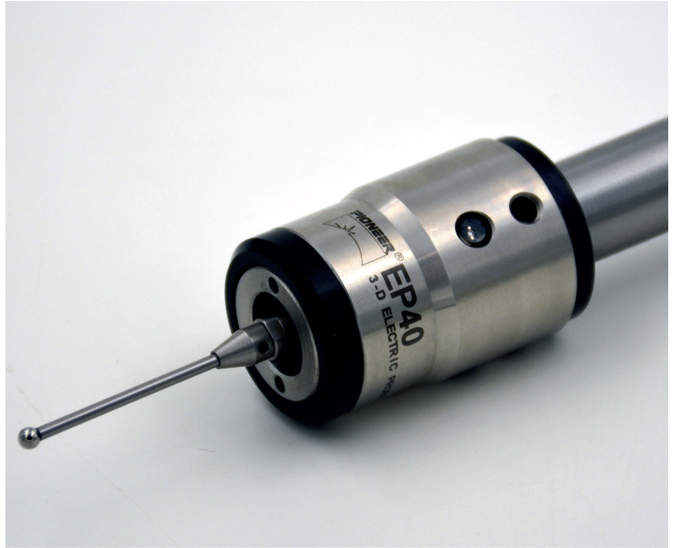


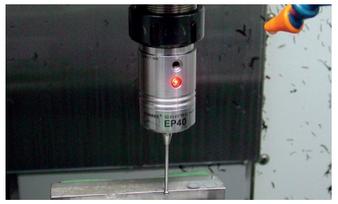

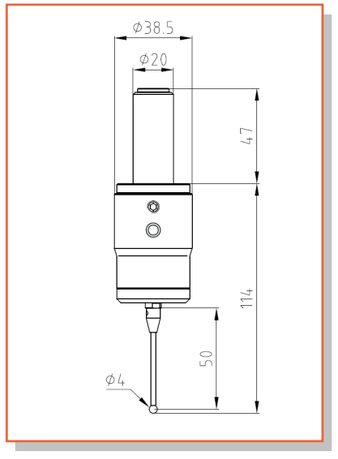


## Technical Parameters

◆ Stylus sensing direction: ±X, ±Y, +Z;
◆ Stylus sensing over-travel : X-Y±12° , Z +5 mm;
◆ Unidirectional repeatability（2σ）: ≤ 1 μm;
◆ Battery specification: LR1, 1.5V, 700mAh; 2 ps.;
◆ Seal grade: IP 67.

## Technical Characteristics

◆ By adjusting the connecting link between the main body of the probe and its straight shank,clamped by CNC tool holder.
◆ Three LED indicator lights are used to show the trigger state of the probe，and convenient for machine tool operators to observe.

## Applicable equipments

◆ Suitable for machining centers of various specifications, CNC boring, milling machines, drilling and tapping centers, etc.
◆ Applicable to the measurement of various solid materials with conductive properties

## Application

◆ Setting work-piece coordinate system and machining zero points manually before processing;
◆ Detect and control the key dimensions, position coordinates and their precision manually between two processes;
◆ Detect precision of the key dimensions, shapes, position after processing.

## Notes for purchase

◆ As for special stylus, check whether the standard stylus equipped with the EP40 probe can meet the requirements and whether it is necessary to order special stylus;
◆ As for the probe taper shank, verify the taper hole’s standards and specifications of the machine tool spindle before ordering the probe; The uncommonly used standard and specifications of the taper shank will lead to the increase of probe price and the delay of delivery time, The taper shank provided by us for the probe isn’t equipped with the pull stud.

# EP60 Electric probe

## Composition of Probe

EP60 electric probe consists of three pieces:
1) The main part of EP60 electric probe (including battery cabin ) ;
2) The 7:24 taper shank with standard of BT or ISO(the specification is optional );
3) Stylus(standard model: M4-S60-CB6-S50)

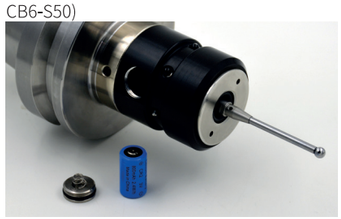

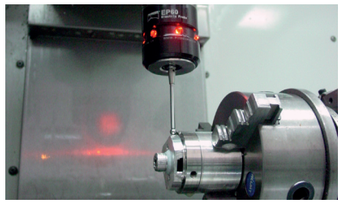


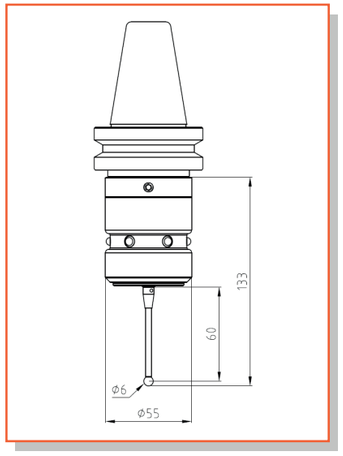


## Application

◆ Setting work-piece coordinate system and machining zero points manually before processing;
◆ Detect and control the key dimensions, position coordinates and their precision manually between two processes;
◆ Detect precision of the key dimensions, shapes, position after processing.

## Technical Parameters

◆ Stylus sensing direction: ±X, ±Y, +Z;
◆ Stylus sensing over-travel: X-Y±12° , Z +5 mm;
◆ Unidirectional repeatability（2σ）: ≤ 1 μm;
◆ Battery specification: CR2, 3.0V, 800mAh; 1 ps.;
◆ Seal grade: IP 67.

## Technical Characteristics

◆ Coaxial adjustment function of probe and shank:
By adjusting the connecting link between the main body of the probe and the taper shank, coaxiality about the center of the measuring ball on the stylus and the center line of the taper shank can be adjusted;
◆ Six LED indicator lights are used to show the trigger state of the probe.

## Applicable equipment and working condition

◆ Suitable for various specifications of machine centers, CNC boring and milling machines, and drilling-tapping machine centers, etc;
◆ Suitable for checking work pieces of all kinds of solid materials with electrical conductivity.

## Notes for purchase

◆ As for special stylus, check whether the standard stylus equipped with the EP60 probe can meet the requirements and whether it is necessary to order special stylus;
◆ As for the probe taper shank, verify the taper hole’s standards and specifications of the machine tool spindle before ordering the probe; The uncommonly used standard and specifications of the taper shank will lead to the increase of probe price and the delay of delivery time, The taper shank provided by us for the probe isn’t equipped with the pull stud.






# STP-42 Cable probe

## Composition of Probe

TP400 cable probe consist of three pieces:
1) STP-42 trigger probe unit;
2) One four-core, oil proof shielded cable with aviation plug at one end.
3) Stylus.

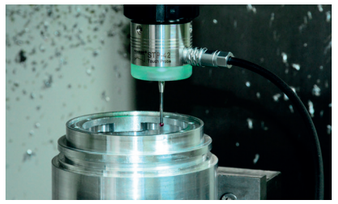

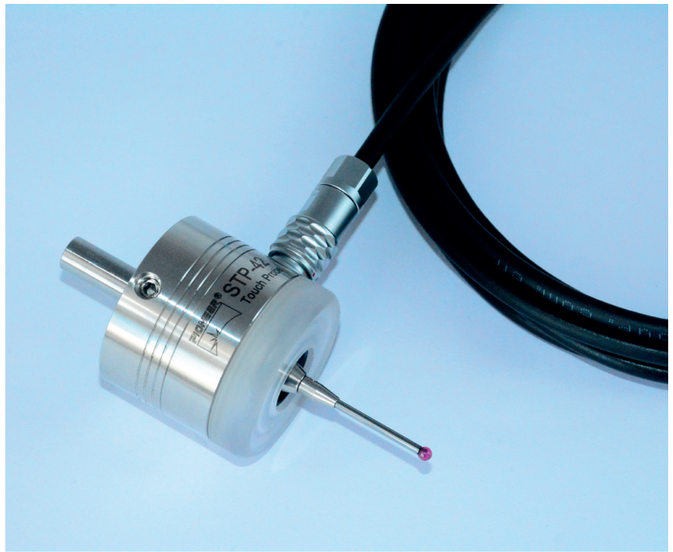

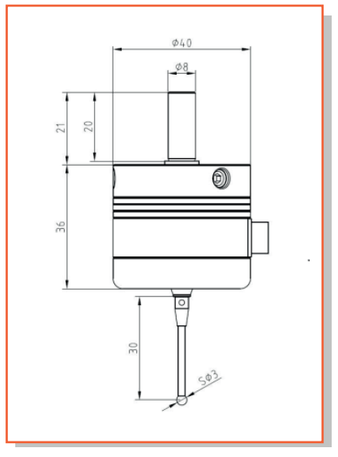


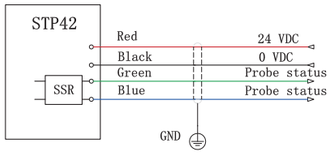


## Technical Parameters

◆ Stylus sensing direction: ±X, ±Y, +Z;
◆ Stylus sensing over-travel : X-Y±15° , Z +5 mm;
◆ Unidirectional repeatability（2σ）: ≤ 2 μm;
◆ Input voltage is 24V±10%(DC) and output load current is 50 mA.
◆ Seal grade: IP 68.

## Technical Characteristics

◆ The signal interface of probe is integrated inside the probe, and the trigger signal is transmitted by cable;
◆ By changing the power supply’s polarity at the probe interface, the logic state of the output signal can be reversed;
◆ The stylus connector of the probe is protected by double layers of rubber seal.
◆ The probe uses cable with aviation plug to transmit signals , which can be quickly installed and discounted, providing convenience for the application of the probe in different equipments.

## Application

◆ Setting work-piece coordinate system and machining zero points automatically before processing;
◆ Detect and control the key dimensions, position coordinates and their precision automatically between two processes;
◆ Detect precision of the key dimensions, shapes, position after processing.
◆ Applicable equipments: various specifications of CNC grinding machines, CNC lathes and specially measuring devices.

## Composition of Probe System

OTS-40 series optical tool setter system include two pieces of hardware and one software package, the two pieces of the hardware are:

1) OTC200 series optical tool setter;

2) OSI-30 series optical receiver(the standard cable length 8m/the optional lengthened cable).

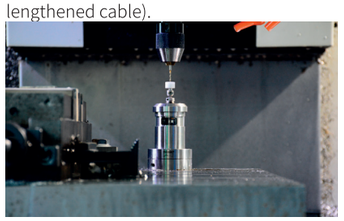

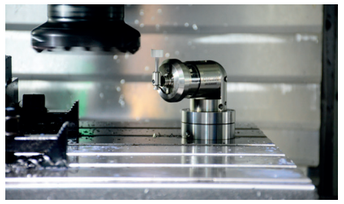

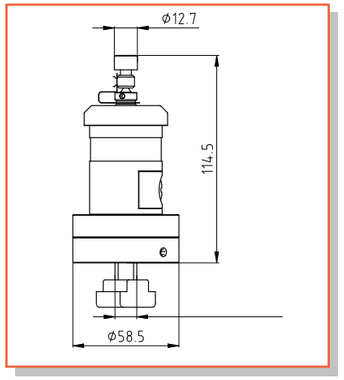


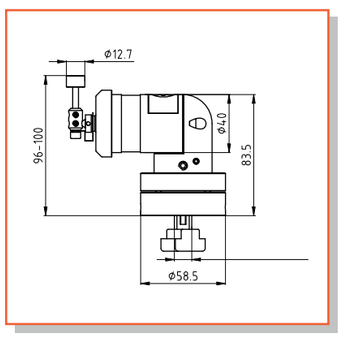



## Technical Parameters

1) The technical parameters of OTC200 series optical probe :

◆ Sensing direction of the pillar: ±X, ±Y, -Z;

◆ The pillars sensing over-travel : X-Y±5mm, Z -8 mm;

◆ The diameter of the touching pillar( for cutting tool touching): 12.7±0.005 mm; the pillar’ s hardness : HM8.5 ;

◆ The trigger repeatability of the pillar(2σ): ≤ 1 μm;

◆ Working days of new batteries ( 5% utilization rate in a single shift):90- 140 days;

◆ Seal grade: IP68.

2) The technical parameters of OSI-20 series optical receiver:

◆ Optical signal receiving/sending distance: 3 m;

◆ Input voltage: 24V±10%( DC);

◆ Output load current: 50 mA;

◆ Seal grade: IP68.

## Technical Characteristics

◆ Tool setter switch on/off method: M code on/off;

◆ Infrared coded signals are used to transmit information between th etool setter and the receiver;

◆ OTC200-V can be selected based on actual operating conditions;

◆ The position of tool setter pillar can be roughly and precisely adjusted by the connecting link of the pillar and the adjusting link of tool setter for mounting.

## Application

◆ Set lengths parameter of cutting tools automatically before CNC processing;

◆ Detect wear and breakage of cutting tools automatically between two processes or after the CNC processing;

◆ Through checking cutting tool parameters to control the change of machining precision from the temperature change of the machine;






## Basic configuration of the probe system

1) OTC200 Series tool setter

◆ Standard tool setter pillar model: M0-S31.5-CP12.7;

◆ Battery specification: 14250, 3.6V, 1000mAh; 2 ps.;.

2) OSI-30 Series receiver

◆ The cable length usually is 8 meters;

◆ Fixed bracket with universal adjustment function is equipped.


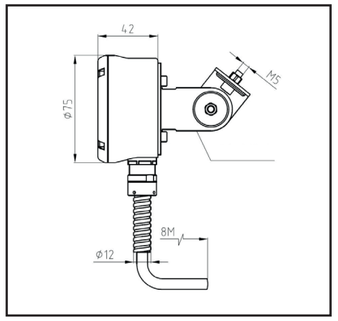


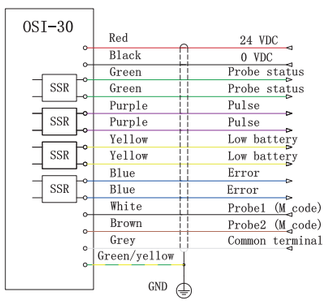


## Notes:

◆ If the square pillar of tool setter is needed, customers should give special instructions when ordering the products.

◆ As for the cable length, verify if the 8-meter cable equipped with the OSI-30 receiver is enough for installing it in the machine tool. If it is not, the additional instruction is required when ordering the product;

# RTS-20M Series Optical Tool Setter System

## Composition of Probe System

RTS-20M series optical tool setter system include two pieces of hardware and one software package, the two pieces of the hardware are:
1) RP610T series tool setter;
2) RSI-20D series receiver(the standard cable length 8m/the optional lengthened cable).

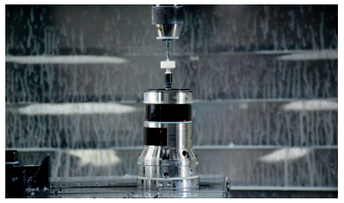


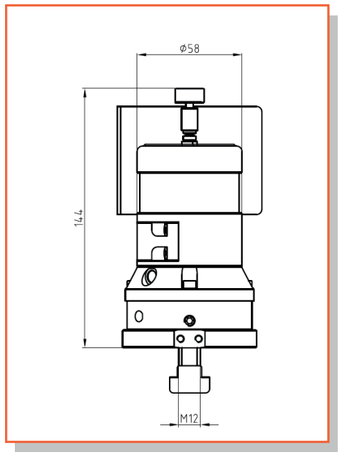


## Technical Parameters

1) The technical parameters of RP610T series optical probe :
◆ Sensing direction of the pillar: ±X, ±Y, -Z;
◆ The pillars sensing over-travel : X-Y±12° , Z +5 mm;
◆ The pillar’ s hardness : HM8.5 ;
◆ The trigger repeatability of the pillar(2σ): ≤ 1 μm;
◆ Radio signal receiving/sending distance : ≤ 14 m;
◆ Working days of new batteries ( 5% utilization rate in a single shift):280- 1320 days;
◆ Seal grade: IP68.
2) RSI-20D radio receiver technical parameters:
◆ Radio signal receiving/sending distance: ≤ 14 m;
◆ Input voltage is 24V±10% ( DC) and output load current is 50 mA.
◆ Seal grade: IP68.

## Technical Characteristics

◆ Tool setter switch on/off method: M code on/off;
◆ Radio code signals are used to transmit information between the tool setter and the receiver.
◆ The transmission frequency of the radio signal is within 2.4 G-2.483 G, the number of transmission channel is 16;
◆ The position of tool setter pillar can be roughly and precisely adjusted by the connecting link of the pillar and the adjusting link of tool setter for mounting.

## Application

◆ Set lengths parameter of cutting tools automatically before CNC processing;
◆ Detect wear and breakage of cutting tools automatically between two processes or after the CNC processing;
◆ Through checking cutting tool parameters to control the change of machining precision from the temperature change of the machine;






# RTS-20M Series Optical Tool Setter System

## Basic configuration of the probe system

1) RP610T Series tool setter
◆ Standard tool setter pillar size: 16*16*8 (mm) ;
◆ Battery specification: 14250, 3.6V, 1000mAh; 2 ps.;.
2) RSI-20D Series receiver
◆ The cable length usually is 8 meters;
◆ Fixed bracket with universal adjustment function is equipped.


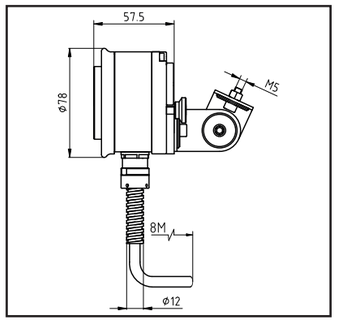


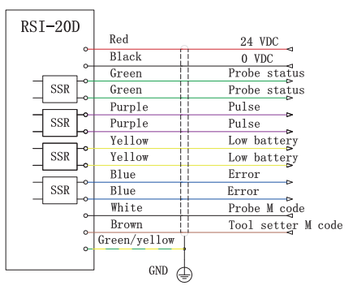


## Notes:

◆ If the square pillar of tool setter is needed, customers should give special instructions when ordering the products.
◆ As for the cable length, verify if the 8-meter cable equipped with the RSI-20D receiver is enough for installing it in the machine tool. If it is not, the additional instruction is required when ordering the product;

# TTC100 Cable tool setter

## Composition of tool setter

TTC100 cable tool setter consists of a hardware and the software. The model of the software is SP-T10; the hardware also has two accessories:

1) 20 mm thick mounting base;
2) Blow- cleaning device (optional).


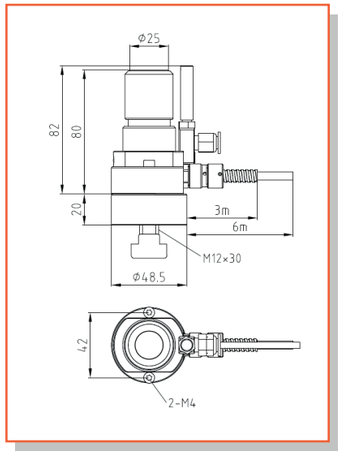


## Technical Parameters

◆ The nominal height of the TTC100 tool setter is 80mm, it is 100mm when the 20 mm thick mounting base added;
◆ The diameter of the touching face( for cutting tool touching): 25.0 mm, the hardness of the touch face: HRA 90-93;
◆ Travel distance of the touch face in -Z direction: 5 mm;
◆ Trigger repeatability of the tool setter(2σ): ≤ 1 μm;
◆ Input voltage is 24V±10% (DC) and output load current is 50 mA(max).
◆ Seal grade: IP68.

## Technical Characteristics

◆ Tool setter transmits signal through cable, reversal connecting tool setter' s power supply can reverse the state of the output signal;
◆ There are two installing and fixing methods, one is to install directly, the other is to add a mounting base of 20mm thick, the tool setter' s height can be raised from 80mm to 100mm.
◆ One LED indicator light is used to display the tool setter' s working state.

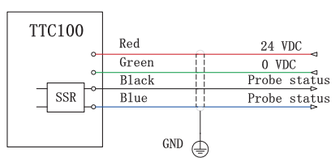


## Notes for purchase

◆ As for the cable length, verify whether the cable length equipped is enough for installing the tool setter on your machine tool; If lengthening cable is needed, special instructions should be given when ordering the product;
◆ Verify whether you need blow-cleaning device or not, and whether there is a spare M code in the CNC system of your machine for controlling the blowing device.

## Application

◆ Set lengths parameter of cutting tools automatically before CNC processing;
◆ Detect wear and breakage of cutting tools automatically between two processes or after the CNC processing;
◆ Through checking cutting tool parameters to control the change of machining precision from the temperature change of the machine;






# TTC200 Cable tool setter

## Composition of tool setter

TTC200 cable tool setter consists of a hardware and the software. The model of the software is SP-T10; the hardware also has a mounting base.

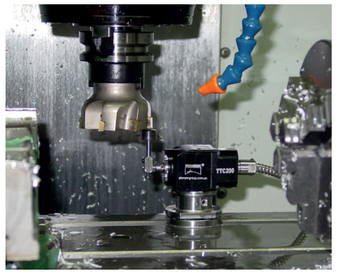


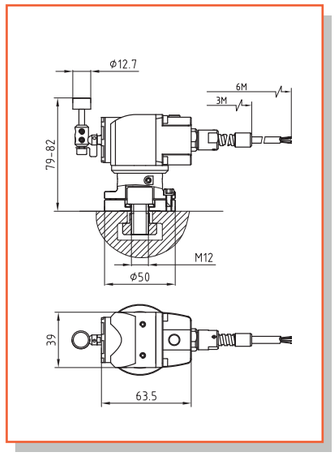


## Technical Parameters

◆ The diameter of the touching pillar( for cutting tool touching): 12.7±0.005 mm; the pillar' s hardness : HM8.5 ;
◆ Sensing direction of the pillar: ±X, ±Y, -Z;
◆ The pillars sensing over-travel : X-Y±5mm, Z -8 mm;
◆ The trigger repeatability of the pillar(2σ): ≤ 1 μm;
◆ Input voltage is 24V±10%(DC) and output load current is 50 mA(max);
◆ Seal grade: IP68.

## Technical Characteristics

◆ Tool setter transmits signal through cable, reversal connecting tool setter' s power supply can reverse the state of the output signal;
◆ The position of tool setter pillar can be roughly and precisely adjusted by the connecting link of the pillar and the adjusting link of tool setter for mounting.
◆ One LED indicator light is used to display the tool setter' s working state.

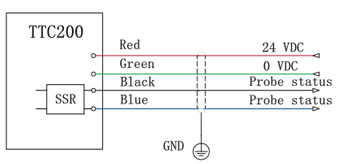


## Notes for purchase

◆ As for the cable length, verify whether the cable length equipped is enough for installing the tool setter on your machine tool; If lengthening cable is needed, special instructions should be given when ordering the product;
◆ If the square pillar of tool setter is needed, customers should give special instructions when ordering the products.

## Application

◆ Set lengths parameter of cutting tools automatically before CNC processing;
◆ Detect wear and breakage of cutting tools automatically between two processes or after the CNC processing;
◆ Through checking cutting tool parameters to control the change of machining precision from the temperature change of the machine;

# TTC400A Cable tool setter unit

## Installing structure of the unit

TTC400A cable tool setter unit is a product specially developed by our company for replacing some vulnerable tool setting units that is part of the swing-arm for setting the cutting tool in the CNC lathes; The structure and size of the installing parts are exactly the same as the replacement, and the output signal is exactly the same.

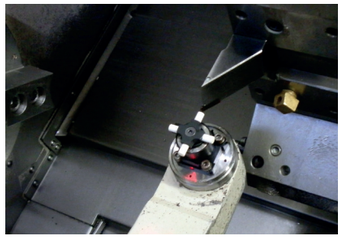


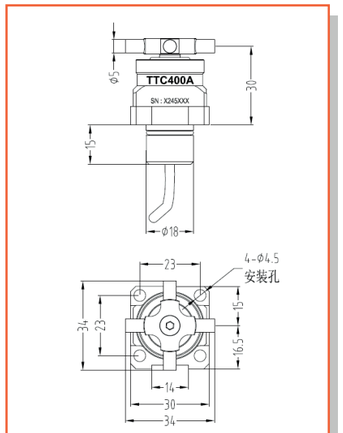


## Technical Parameters

◆ The diameter of the four ceramic touching pillar( for cutting tool touching): 5.0 mm; the pillars' hardness : HM8.5;
◆ Sensing direction of the pillars: ±X, ±Z;
◆ The pillars sensing over-travel : X-Z±5 mm;
◆ The trigger repeatability of the pillar(2σ): ≤ 1 μm;
◆ Input voltage is 24±10% V DC and output load current is 50 mA;
◆ Signal model and LED instruction: high electric level output with normal signal state, LED normally on; When any one pillar is triggered, the signal output point is suspended and the LED is off;
◆ Seal grade: IP68.

## Technical Characteristics

◆ As shown in the picture, the installing structure and size of the tool setter unit are exactly the same as the replacement;
◆ Tool setter unit transmits tool setting signal through cable;
◆ It is ensured during manufacturing that the position relationship between four pillars of the tool setter unit and mounting base;
◆ One LED indicator light is used to display the tool setter' s working state.

## Notes for purchase

◆ As for the cable length, verify whether the cable length equipped is enough for installing the tool setter unit on your machine tool; If lengthening cable is needed, special instructions should be given when ordering the product;

## Application

◆ Set parameters of cutting tools automatically before CNC processing;
◆ Detect wear and breakage of cutting tools automatically between two processes or after the CNC processing;
◆ Through checking cutting tool parameters to control the change of machining precision from the temperature change of the machine;
◆ Applicable equipments: various specifications of CNC lathe, turning machine center and CNC milling -turning center;
◆ The cable: TTC400A tool setter unit is equipped a 6 meter-long, three-core, anti-oil shielded cable.






# TTC10 Portable Tool Setter

## Installing

TTC10 tool setter is a kind of portable tool setter specially used to set the length parameter of cutting tool in the CNC milling machine, or drilling machine center and etc, it is especially suitable for single piece and a small batch of production.

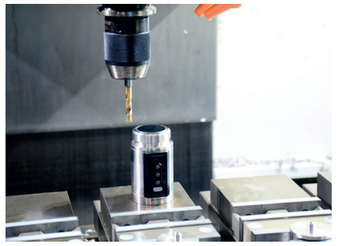

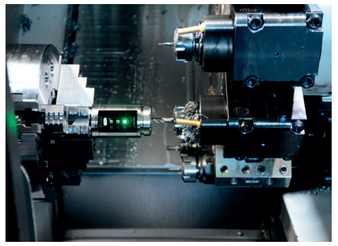

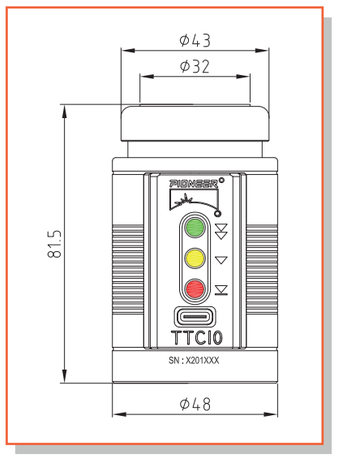


## Technical Parameters

◆ Nominal height: 80.0±0.003 mm;
◆ Diameter of the touching face( for cutting tool touching): 30.0 mm;
◆ Hardness of the touch face: HRC 60-62;
◆ Travel distance of the touch face in -Z direction: 5 mm;
◆ Trigger repeatability of the tool setter(2σ): ≤ 2 μm;
◆ The parallelism between the touching face and the bottom: ≤ 3 μm;
◆ Seal grade: IP66.

## Technical Characteristics

◆ Appling two position indicators for warning to speed up the process of the cutting tool calibration;
◆ four Magnets inset in bottom of tool setter order to the tool setter with a adsorption capacity;
◆ It's powered by a battery, model: CR2，3.0V，800 mAh;
◆ Three LED indicator lights and a buzzer are used to indicate the working status of the tool setting.

## Notes for purchase

◆ As for the cable length, verify whether the cable length equipped is enough for installing the tool setter on your machine tool; If lengthening cable is needed, special instructions should be given when ordering the product;
◆ If the square pillar of tool setter is needed, customers should give special instructions when ordering the products.

## Application

◆ Set length parameters of cutting tools manually before CNC processing;
◆ Detect wear and breakage of cutting tools manually between two processes or after the CNC processing;
◆ Applicable equipments: machine centers, CNC boring machines, CNC milling machines, and drilling-tapping machine centers, etc;

# Introduction to various styli

## Styli classification and application

- All kinds of styli needed for various probes used in CNC machine tool and the accessories needed for tool setters;
- All kinds of styli and accessories needed for various probes used in CMM;
- All kinds of styli and accessories needed for probes used in gear measuring machine;
- All kinds of styli and accessories needed by the other specially measuring equipment;
- For details, please refer to the product catalog of Styli And Accessories composed by our company alone.







# The software for probes and tool setters

## The function of SP-W10 software package for work piece measuring （special for boring and milling machine）

1）Stylus’ automatic calibration

2）Protection of stylus collision during a probe’s movement

3）Groove and boss measurement

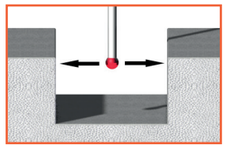
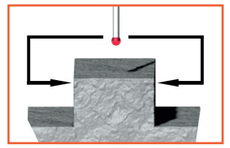

4）Bore and axis measurement

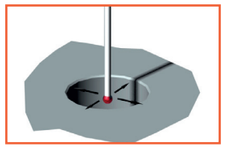
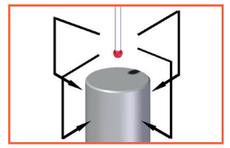

5）X,Y single-surface measurement

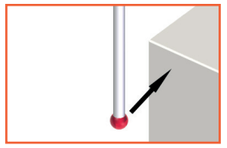
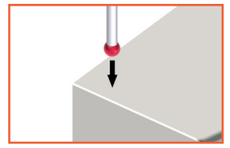

6）Internal corner and external corner measurement

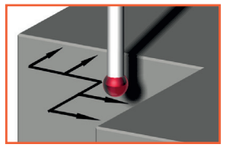
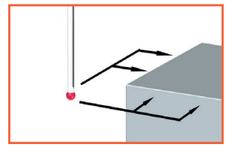

7）4th axis measurement

8）The measurement of the angle on XY plane

9）Measure the three points on arc

10）Measure the distance between the two holes

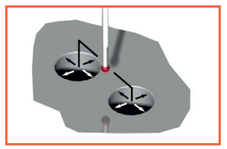

## The function of SP-W50 software package for work piece measuring （special for lathe）

1）Stylus’ automatic calibration

2）Protection of stylus collision during a probe’s movement

3）Measurement of convex circles and annular groov

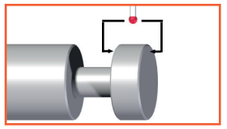
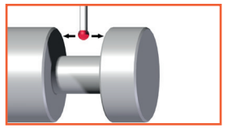

4）Bore and axis measurement

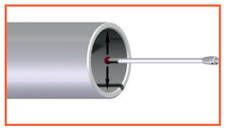
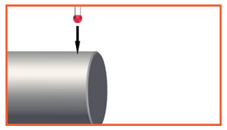

5）Measurement of the step plane with X and Y axes

6）Measurement of X-Z plane angle

7）Measurement of the internal arc on X-Z plane

## The function of SP-T10 software package for cutting tool setting（special for boring and milling machine）

1）Calibrate the center of the tool setter automatically.

2）Setting standard tool length.

3）Semi - automatic tool length setting and full - automatic tool length setting


4）Semi - automatic tool diameter setting and full - automatic tool diameter setting

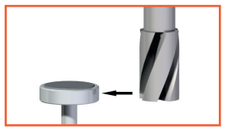

5）Automatic detection of tool wear and breakage